MADISON

Armless Swivel Bar Stool

MADE FOR GENERATIONS

Item Number:	#2251-SBS
Cushion:	#51-S (seat) #73-B (back - optional)
Material:	Wrought Aluminum
Dimensions:	W25.25" D28.25" H52.25"
Seat Cushion:	W17.5" D17.5" H3"
Back Cushion:	W17.5" D2.5" H17.5"
Seat Height:	30.75"
Weight:	35 lbs.
Warranty: (Retail)	Limited 20 Year Structural (frame) Limited 5 Year Finish Limited 2 Year Cushion Limited 2 year Component Parts
Features:	-1" Sq. 12 Gauge Aluminum Tube Frame -Contoured Back for Support & Comfort -Flat Bar Strap for Seat Support -Reticulated Outdoor-Grade Foam -UV Resistant -Optional welt and cording available -Glides Protect Frame & Surface (COM0101A)
COM Yardage:	Seat Cushion - 1 yard Back Cushion - 1 yard **Based on 54" wide plain fabric w/ no repeat railroad, or centering. Contact sales@owlee.com for custom fabric quote.*

Finishes:

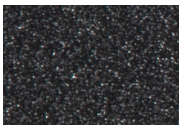
SP21: Graphite

SW40: Driftwood

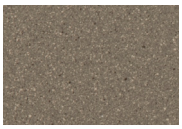
TC20: Sandalwood

SP18: Dark Bronze

SP40: Copper Canyon

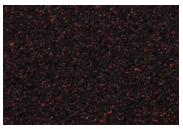
SP11: Rosewood

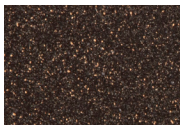
SP42: Espresso

SP22: Sable

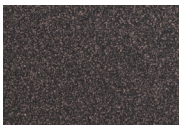
PG10: Terra Antigua

VT15: Velvet Pewter

VT35: Velvet Black

VT25: Velvet White

VT05: Velvet Bonze

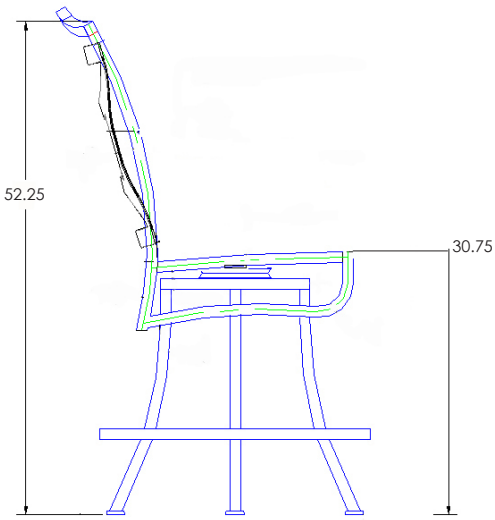

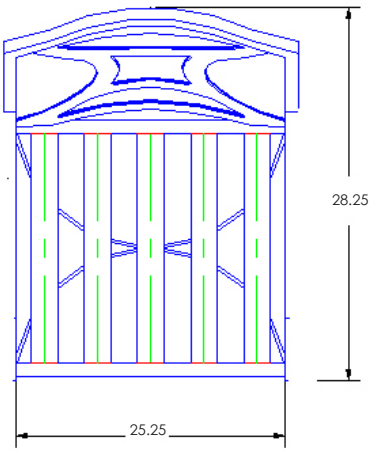

O.W Lee Co., Inc. Fine Casual Furniture | DesignHarmony™ | Table Tops | Casual Fireside® and Accessories
1822 East Francis Street Ontario CA 91761 T 909 947 3771 F 909 947 6614 E sales@owlee.com W www.owlee.com

MANUFACTURED IN THE U.S.A.

OW Lee reserves the right to modify specifications as may be necessary. Please contact the factory to confirm specifications.