CLASSICO-W

Swivel Counter Stool With No Arms

MADE FOR GENERATIONS

Item Number:	#951-SCS
Cushion:	#51-S (seat) #51-B (back - optional)
Material:	Wrought Iron
Dimensions:	W23.25" D26" H45.5"
Seat Cushion:	W17.5" D17.5" H3"
Back Cushion:	W17.5" D2.5" H17.5"
Seat Height:	28"
Weight:	30 lbs.
Warranty: (Commercial)	Limited 5 Year Structural (frame) Limited 3 Year Finish Limited 1 Year Cushion Limited 1 year Component Parts
Features:	-Hand Forged Wrought Iron -¾" Galvanized Steel Tubing Frame -Galvanized Interwoven Lattice Back -Aluminum Rivets -Reticulated Outdoor-Grade Foam -DuPont Delrin Glides (COM0101A)
COM Yardage:	Back Cushion - 1 yard Seat Cushion - 1 yard **Based on 54" wide plain fabric w/ no repeat railroad, or centering. Contact sales@owlee.com for custom fabric quote.*

Finishes:

PG20: Coastal Grey

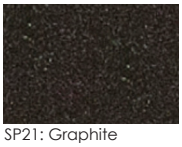
SP21: Graphite

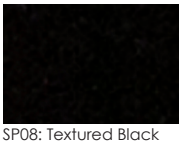
SP08: Textured Black

TC75: Oxford White

SW40: Driftwood

TC20: Sandalwood

SP18: Dark Bronze

PG50: Metallic Cinnamon

SP40: Copper Canyon

SP11: Rosewood

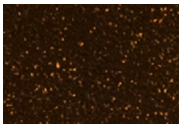
SP42: Espresso

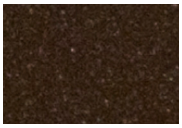
SP22: Sable

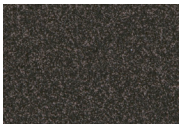
TG10: Terra Antigua

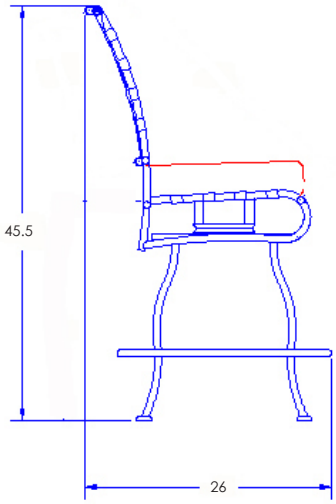

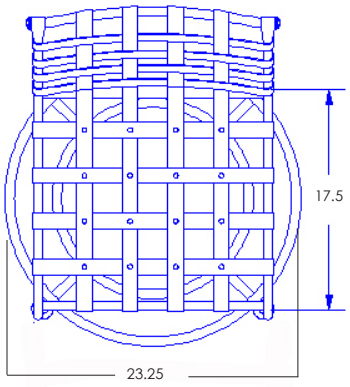

O.W Lee Co., Inc. Fine Casual Furniture | DesignHarmony™ | Table Tops | Casual Fireside® and Accessories
1822 East Francis Street Ontario CA 91761 T 909 947 3771 F 909 947 6614 E sales@owlee.com W www.owlee.com

MANUFACTURED IN THE U.S.A.

OW Lee reserves the right to modify specifications as may be necessary. Please contact the factory to confirm specifications.