MARQUETTE

Swivel Counter Stool With Arms

MADE FOR GENERATIONS

Item Number:	#2053-SCS
Cushion:	#53-S (Seat) #53-B (Back - optional)
Material:	Wrought Iron
Dimensions:	W23" D24.25" H45.75"
Seat Cushion:	W20" D18" H3"
Back Cushion:	W20" D1" H17.5"
Arm Height:	35"
Seat Height:	27"
Weight:	38 lbs.
Warranty: (Retail)	Limited 20 Year Structural (frame) Limited 5 Year Finish Limited 2 Year Cushion Limited 2 year Component Parts
Features:	-¾" Galvanized Steel Tubing Frame -Galvanized Interwoven back -Spring Steel Strap Seat -Aluminum Rivets -Leg Brace Support Stretchers -Reticulated Outdoor-Grade Foam -Glides Protect Frame & Surface (COM0101A)
COM Yardage:	Seat Cushion - 1 yard Back Cushion - 1 yard **Based on 54" wide plain fabric w/ no repeat railroad, or centering. Contact sales@owlee.com for custom fabric quote.*

Finishes:

PG20: Coastal Grey

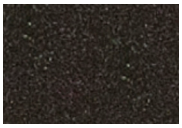
SP21: Graphite

SP08: Textured Black

TC75: Oxford White

SW40: Driftwood

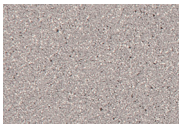
TC20: Sandalwood

SP18: Dark Bronze

PG50: Metallic Cinnamon

SP40: Copper Canyon

SP11: Rosewood

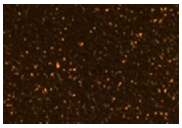
SP42: Espresso

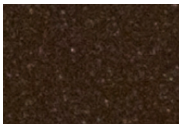
SP22: Sable

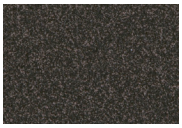
TG10: Terra Antigua

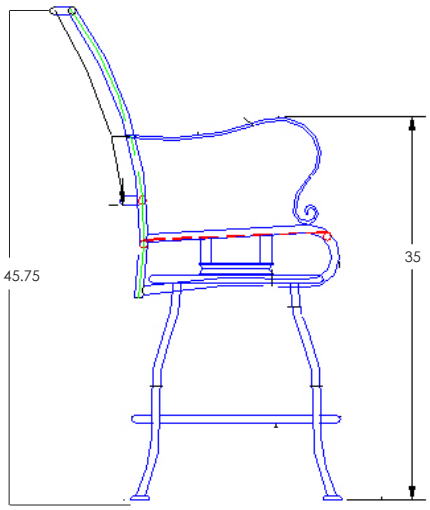

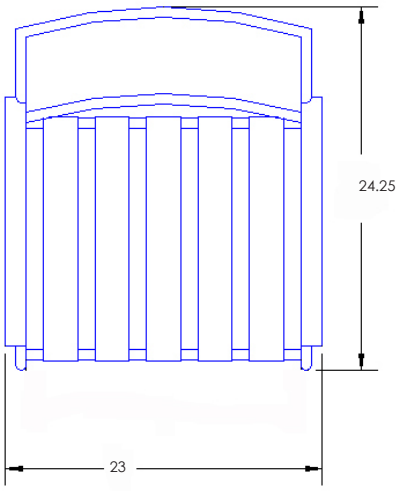

O.W Lee Co., Inc. Fine Casual Furniture | DesignHarmony™ | Table Tops | Casual Fireside® and Accessories
1822 East Francis Street Ontario CA 91761 T 909 947 3771 F 909 947 6614 E sales@owlee.com W www.owlee.com

MANUFACTURED IN THE U.S.A.

OW Lee reserves the right to modify specifications as may be necessary. Please contact the factory to confirm specifications.