CAMBRIA

Club Swivel Counter Stool

MADE FOR GENERATIONS

Item Number:	#17133-SCS
Cushion:	#133 (Seat, Back & Arms)
Material:	Wrought Iron
Dimensions:	W29.75" D28.75" H46"
Seat Cushion:	W20" D20" H4"
Back Cushion:	W23" D6" H21"
Arm Cushions:	W5" D17.25" H8.25" (x2)
Arm Height:	34.25"
Seat Height:	28"
Weight:	39 lbs.
Warranty: (Commercial)	Limited 5 Year Structural (frame) Limited 3 Year Finish Limited 1 Year Cushion Limited 1 year Component Parts
Features:	-Hand forged wrought iron -Super-Polyester powder coating -UV Resistant -Reticulated Outdoor-Grade Foam -Stock Sunbrella and COM available
COM Yardage:	Seat, Back & Arm Cushions - 2.25 yards **Based on 54" wide plain fabric w/ no repeat railroad, or centering. Contact sales@owlee.com for custom fabric quote.*

Finishes:

SP40 Copper Canyon

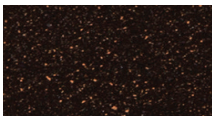
SP42 Espresso

SP11 Rosewood

SP22 Sable

PG50 Metallic Cinnamon

SP18 Dark Bronze

SP08 Textured Black

SP21 Graphite

TC70 Alpine Silver

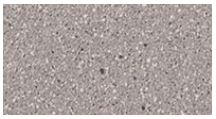
TC20 Sandalwood

SW40 Driftwood

TC75 Oxford White

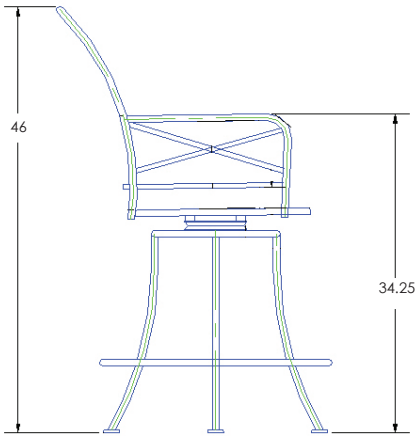

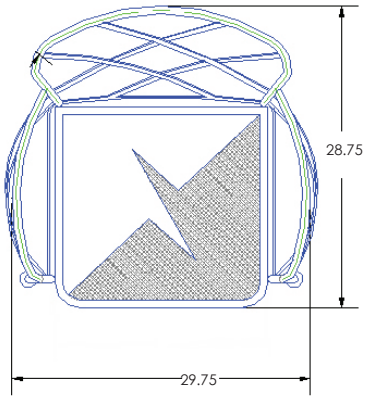

O.W Lee Co., Inc. Fine Casual Furniture | DesignHarmony™ | Table Tops | Casual Fireside® and Accessories
1822 East Francis Street Ontario CA 91761 T 909 947 3771 F 909 947 6614 E info@owlee.com W www.owlee.com

MANUFACTURED IN THE U.S.A.